NOTES:

1. THIS DRAWING HAS BEEN DEVELOPED FROM SHIPCHECK INFORMATION FOR ACCOMPLISHING THE INSTALLATION OF WEDGE DETAIL AND MODIFICATIONS TO THE RUDDER ON LCM-8,MOD-1.
2. ALL FABRICATION WELDING AND INSPECTION TO BE IN ACCORDANCE WITH NAVSEA 0900-LP-014-5010.WELD SIZES BASED ON USE OF AWS A5.1, CLASS E7018 ELECTRODES FOR LC STEEL TO LC STEEL.
3. EQUIPMENT AND WORKMANSHIP SHALL BE IN ACCORDANCE WITH USCG AND ABS REGULATIONS.
4. REPAIR ALL PAINT DAMAGED BY THIS INSTALLATION AND PAINT ALL NEW STEEL IN ACCORDANCE WITH U.S. ARMY TECHNICAL BULLETIN TB43-0144.
5. MATERIAL ORDERED ON THIS DRAWING IS NOT INTENDED TO BE RESTRICTIVE. SUBSTITUTION OF EQUAL QUALITY MATERIAL MAY BE MADE.
6. SLIGHT DEVIATIONS FROM DIMENSIONS SHOWN ARE PERMISSIBLE TO SUIT ACTUAL CONDITIONS FOUND ABOARD THE VESSEL.
7. COMPONENTS SHOWN BY SOLID,HEAVY LINES ARE NEW AND ARE TO BE INSTALLED IN ACCORDANCE WITH THIS DRAWING. PHANTOM LINES INDICATE EXISTING COMPONENTS INSTALLED BY DRAWINGS REFERENCED AS NOTED.
8. PROVIDE CUTOUTS IN WEDGE TO MATE WITH RUDDER STRUTS IF NECESSARY.
9. TOP OF RUDDER TO BE CUT TO OBTAIN A MINIMUM OF 2" CLEARANCE.
10. PRIOR TO WELDING WEDGE TO VESSEL,THE INTERIOR OF THE WEDGE IS TO BE PRIMED WITH TWO COATS OF PRIMER CONFORMING TO FORMULA B4 OF TT-P-645 AND SHALL BE APPLIED AT A MINIMUM DRY FILM THICKNESS OF ONE MIL PER COAT.
11. UPON COMPLETION OF WELDING,INSERT DRAIN PLUGS AND FILL WEDGE WITH CORROSION PREVENTIVE COMPOUND,MIL-C-16173,GRADE 1,DRAIN COMPOUND AND REINSERT ALL FILL AND DRAIN PLUGS.

REFERENCE DRAWINGS
APPLICABLE TO HULL NUMBERS 8540 THRU 8560 AND 8580 THRU 8618

NO.	DRAWING NO.	TITLE
1	145-4510915	LCM-8,MOD-1,BOTTOM PLATING
2	145-4510925	LCM-8,MOD-1,SKEGS AND STRUTS
3	145-4510921	LCM-8,MOD-1,DETAILS BULKHEAD AND TRANSOM

REFERENCE DRAWINGS
APPLICABLE TO HULL NUMBERS 8520 THRU 8539

NO.	DRAWING NO.	TITLE
1	145-2534201	LCM-8,MOD-1,BOTTOM PLATING
2	145-2534221	LCM-8,MOD-1,SKEGS AND STRUTS
3	145-2534195	LCM-8,MOD-1,BULKHEADS AND TRANSOM

SH	STATUS OF REVISIONS				
R	ZONE	LTR	DESCRIPTION	DATE	APPROVED

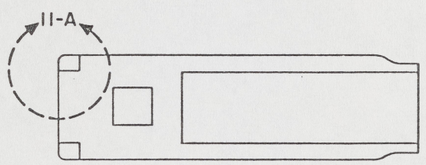

KEY VIEW 5-B
SCALE NONE

THIS DRAWING APPLIES
TO HULL NUMBERS
8520 THRU 8560 AND
8580 THRU 8618 ONLY

PARTS LIST

SUPPLIER	FIND NO.	FSCM	DWG SIZE	PART OR IDENTIFYING NO.	QTY REQD	NOMENCLATURE OR DESCRIPTION	SPECIFICATION	MATERIAL
YARD	6			SAE 130109E	3	PLUG,3/8"-18 NPTF	SAE J531	STEEL
YARD	5			SAE 130138	3	COUPLING,3/8"-18 NPTF	SAE J530	STEEL
YARD	4				1	PLATE,3/16" THK	ASTM A36	STEEL
YARD	3				1	PLATE,3/16" THK	ASTM A36	STEEL
YARD	2				11	PLATE,3/16" THK	ASTM A36	STEEL
YARD	1				2	PLATE,3/16" THK	ASTM A36	STEEL

UNLESS OTHERWISE SPECIFIED DIM/TOLERANCES ARE: per IR.
ONE PLACE [.0] ± —
TWO PLACE [.00] ± —
THREE PLACE [.000] ± —
ANGLES ± —
THIRD ANGLE PROJECTION
DO NOT SCALE THIS DRAWING
FOR INTERPRETATION OF DRAWING DOD STD 100 APPLIES
REMOVE BURRS AND BREAK SHARP EDGES
SHARP EDGES — TO —
FILLET RADIUS — TO —
MATERIAL

DRAWN BY TER DATE 22 AUG 84
CHECKED BY CPT PEO STC 10 NOV 88
CONTRACT NO
DESIGN APPROVAL DATE 15 NOV 88
APPROVED FOR PROCUREMENT DATE 15 Nov 88

U.S. ARMY MOBILITY EQUIPMENT
RESEARCH AND DEVELOPMENT COMMAND
FORT BELVOIR, VIRGINIA 22060

LCM-8, MOD-1,
ADDITION OF WEDGE DETAIL
AND MODIFICATIONS TO RUDDER

SIZE	FSCM	DWG NO.
A1	97403	13226E9453

SCALE AS NOTED SHEET 1 OF 2

17

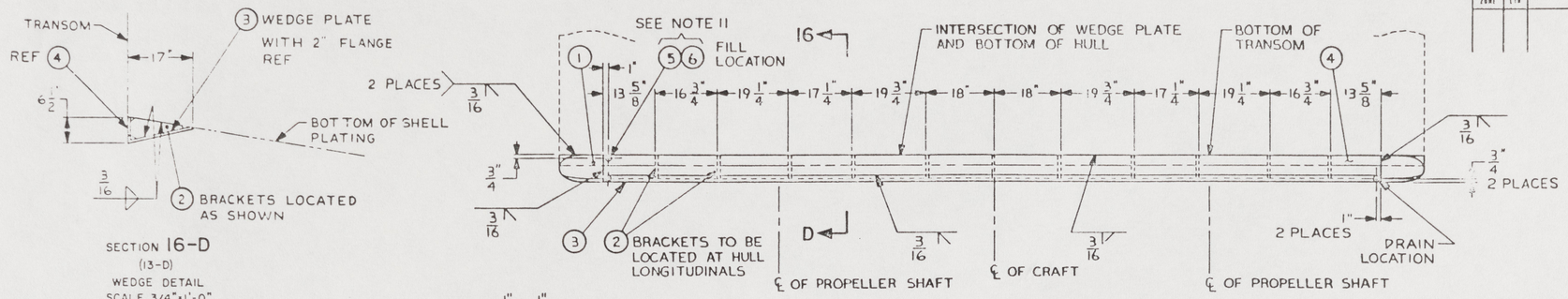

SECTION 16-D
(13-D)
WEDGE DETAIL
SCALE 3/4"=1'-0"

WEDGE DETAIL 13-D
(11-C)
SCALE 3/4"=1'-0"
ROTATED 90° CCW

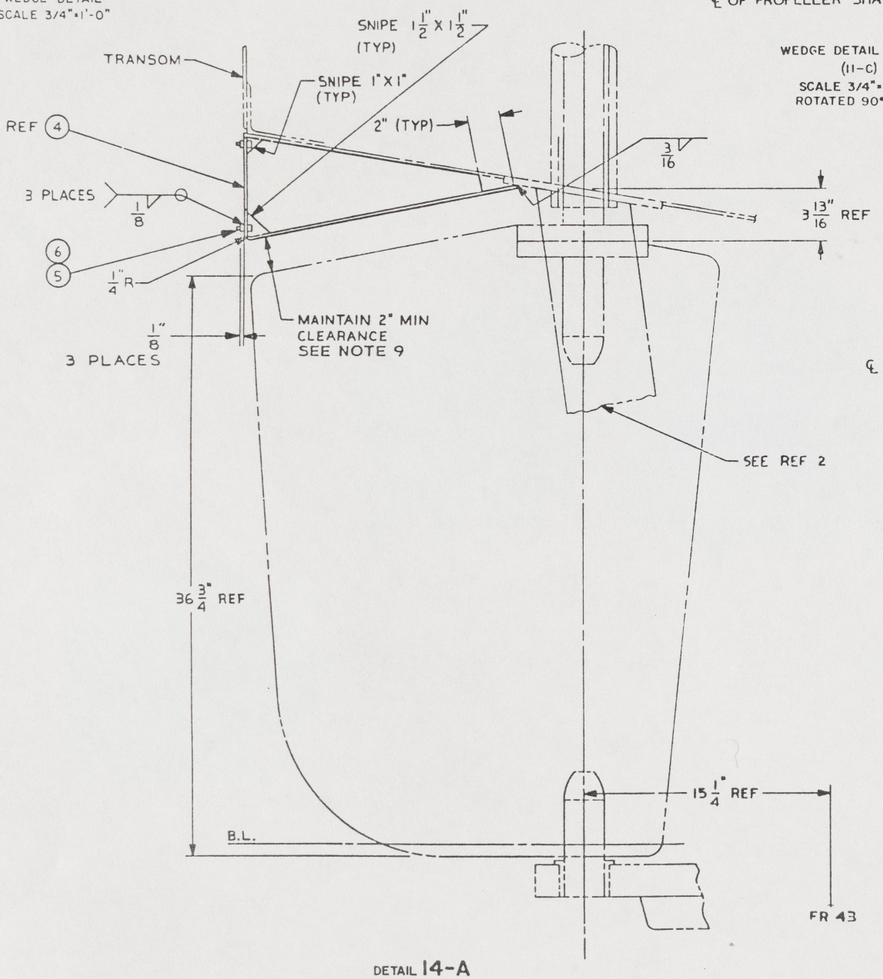

DETAIL 14-A
(11-C)
RUDDER ASSEMBLY
SCALE 3"=1'-0"

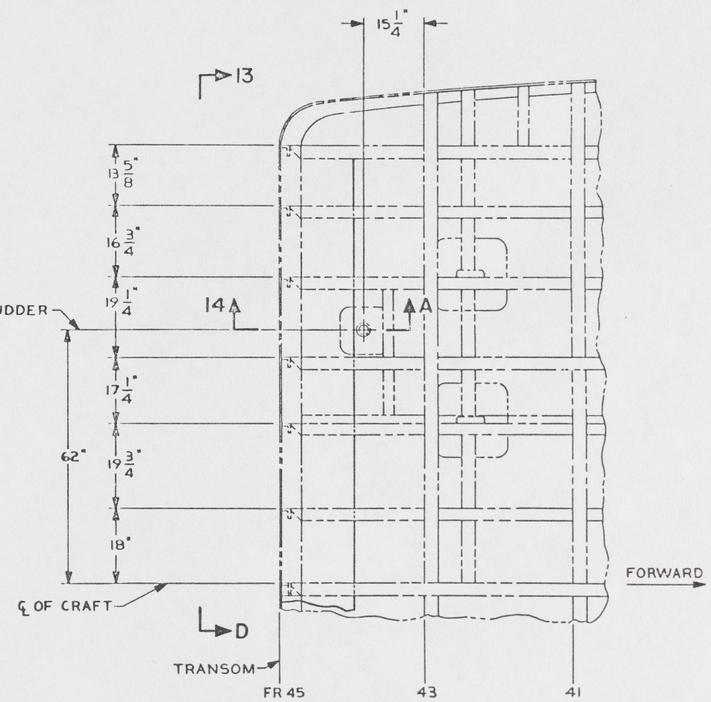

VIEW 11-A
(6-B)
SCALE NONE

REVISIONS				
ZONE	LTR	DESCRIPTION	DATE	APPROVED

UNLESS OTHERWISE SPECIFIED DIM/TOLERANCES ARE IN.
ONE PLACE (.X) ±
TWO PLACE (.XX) ±
THREE PLACE (.XXX) ±
ANGLES ±
THIRD ANGLE PROJECTION
DO NOT SCALE THIS DRAWING
FOR INTERPRETATION OF DRAWING DOD STD 100 APPLIES
REMOVE BURRS AND BREAK SHARP EDGES
SHARP EDGES TO
FILLET RADII TO
MATERIAL

DRAWN BY TER DATE 22 AUG 84
CHECKED BY C.T PROD 10 NOV 88
CONTRACT NO
DESIGN APPROVAL
DATE
APPROVED FOR PROCUREMENT
DATE

U.S. ARMY MOBILITY EQUIPMENT RESEARCH AND DEVELOPMENT COMMAND
FORT BELVOIR, VIRGINIA 22060

LCM-8, MOD-1, ADDITION OF WEDGE DETAIL AND MODIFICATIONS TO RUDDER

SIZE A1 | FSCM 97403 | DWG NO 13226E9453
SCALE | SHEET 2

18