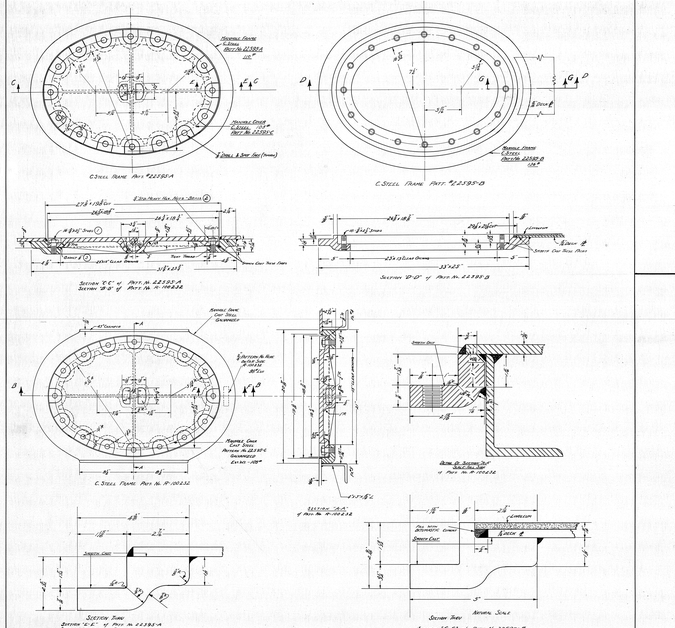

23X15 CAST W.T. & O.T. MANHOLE
22595 & 100232

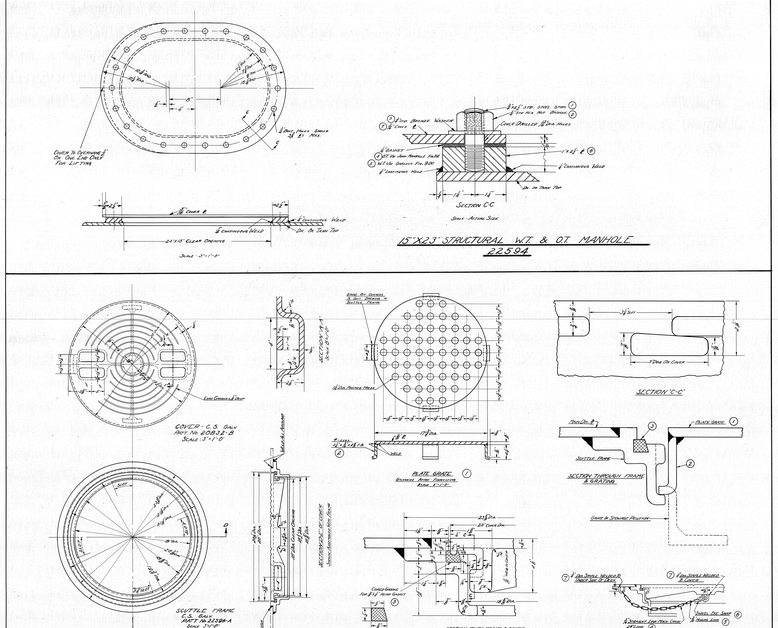

15"X23" STRUCTURAL W.T. & O.T. MANHOLE
22594

18" W.T. FLUSH DECK SCUTTLE
22596

NOT USED ON CONTRACT W-33-015-ac 5749

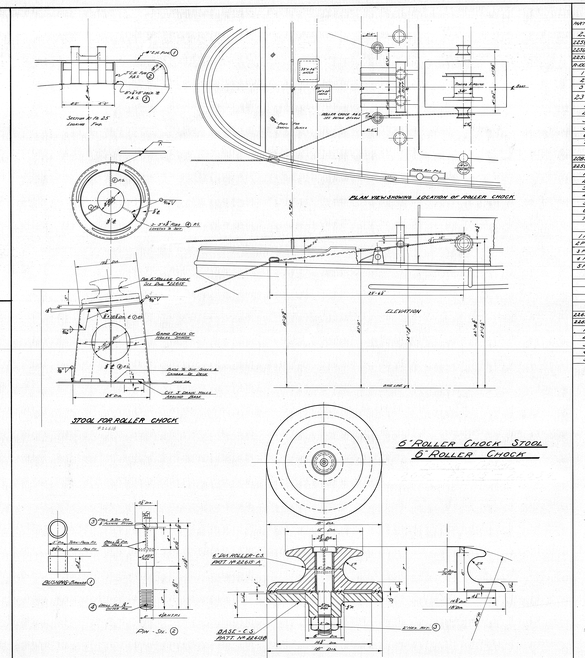

BILL OF MATERIALS

PART NO.	NUMBER	MATERIAL	DESCRIPTION	WEIGHT	UNIT WT. PER PIECE	REMARKS
23"X15" CAST W.T. & O.T. MANHOLE - 22595-100232						
22595-A	2		"Frame" Frame	C.S.		
22595-C	10		"Frame" Chair	C.S.		
22595-B	1		"Frame" Frame	C.S.		
100232	1		"Frame" Frame	C.S.		
1	168		3/4" Stud	Stl.		1/2 for Top of the Manhole
2	180		3/8" Hex. Nut	Brass		
3	10		3/8" Hex. Washer	Brass		1/4" Pin in Nut Threads
15"X15" STRUCTURAL W.T. & O.T. MANHOLE - 22594						
1	384		3/4" Stud	Stl.		1/2" Pin in Top of Cover Plate
2	288		3/4" Hex. Nut	Brass		
3	288		3/4" Hex. Washer	Brass		
4	12		3/8" x 3/8" Plate	Steel		Gasket Fig. # 900
5	12		3/8" x 3/8" Plate	Steel		
6	12		3/8" x 3/8" Plate	Steel		
7	12		3/8" x 3/8" Plate	Steel		
18" W.T. FLUSH DECK SCUTTLE - 22596						
22596-B	1		Cover	C.S.		
22598-A	1		Frame	C.S.		
1	1		Bearing Bolt	Stl.		
2	4		3/4" x 3/4"	Stl.		
3	1		1/2" x 4" Sheet	Rub.		
4	1		1/4" Hex. Nut	Stl. Bra.		
5	1		1/4" Washer	Stl.		
6	1		1/4" Cotter Pin	Brass		
7	2		1/2" Hex. Bracket	Stl.		
6" ROLLER CHOCK STOOL - 22618						
1 PL-5	2		1/2" x 1/2"	Stl.		
2 PL-5	2		1/2" x 1/2"	Stl.		
3 PL-5	2		1/2" x 1/2"	Stl.		
4 PL-5	2		1/2" x 1/2"	Stl.		
5 PL-5	2		1/2" x 1/2"	Stl.		
6" ROLLER CHOCK - 22615						
22615-A	2		6" Dia. Roller	C.S.		
22615-B	2		Base	C.S.		
1	4		1/2" x 1/2"	Brass		
2	2		1/2"	Stl.		
3	2		1/2" x 1/2"	Stl.		
4	2		1/2" Cotter Pin	Stl.		
5	2		1/2" Clevis Firmer			7/8" O

ALTERNATIONS

NO.	MARK	DESCRIPTION	DATE	APPR.

NOTES

REFERENCES

11-12-45	LT-1183	
11-12-45	LT-1184	
11-12-45	LT-1185	
11-12-45	LT-1186	
11-12-45	LT-1187	
11-12-45	LT-1188	
11-12-45