NOTES:

1. COMPONENTS SHOWN BY SOLID, HEAVY LINES ARE NEW, ORDERED AND INSTALLED IN ACCORDANCE WITH THIS DRAWING. LIGHT, BROKEN OR PHANTOM LINES INDICATE COMPONENTS EXISTING OR ORDERED ON AND INSTALLED BY DRAWINGS REFERENCED AS NOTED.
2. ALL FABRICATION, WELDING AND INSPECTION TO BE IN ACCORDANCE WITH NAVSEA 0900-LP-019-5010, WELD SIZES BASED ON USE OF AWS A5.1, CLASS E7018 ELECTRODES FOR LC STEEL TO LC STEEL.
3. TEMPLATE ALL WORK FROM LCU AND EQUIPMENT.
4. EQUIPMENT AND WORKMANSHIP SHALL BE IN ACCORDANCE WITH USCG AND ABS REGULATIONS.
5. REPAIR ALL PAINT DAMAGED BY THIS INSTALLATION AND PAINT ALL NEW STEEL IN ACCORDANCE WITH U.S. ARMY TECHNICAL BULLETIN TM43-0108.
6. MATERIAL ORDERED ON THIS DRAWING IS NOT INTENDED TO BE RESTRICTIVE. SUBSTITUTION OF EQUAL QUALITY MATERIAL MAY BE MADE.
7. SLIGHT DEVIATIONS FROM DIMENSIONS SHOWN ARE PERMISSIBLE TO SUIT ACTUAL CONDITIONS FOUND ABOARD THE VESSEL.

REFERENCE DRAWINGS		
NO.	DRAWING NO.	TITLE
1	818-4661988	STEERING GEAR ARRANGEMENT
2	818-4661987	RUDDER DETAILS
3	818-4638417	RUDDER ARRST & DET
4	203-4634379	KORT NOZZLE DETAILS
5	203-4661662	KORT NOZZLE, FENCE AND FLAP DET

ZONE	LTR	REVISIONS DESCRIPTION	DATE	APPROVED

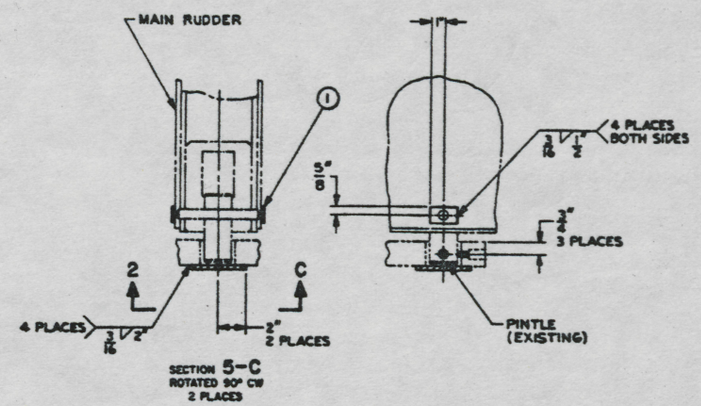

SECTION 5-C
ROTATED 90° CW
2 PLACES

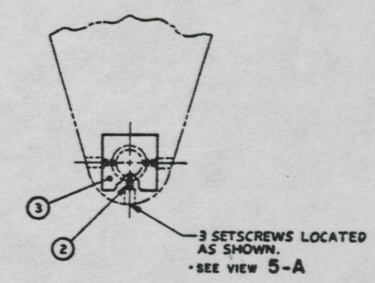

VIEW 2-C
2 PLACES

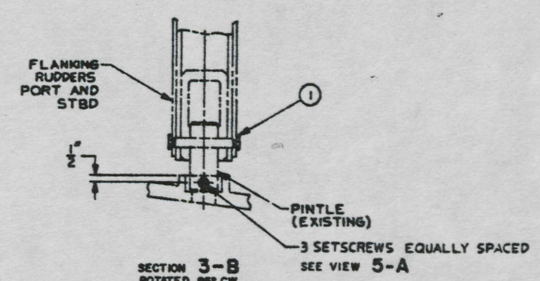

SECTION 3-B
ROTATED 90° CW
4 PLACES
LCU 1667-1670 ONLY

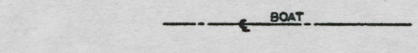

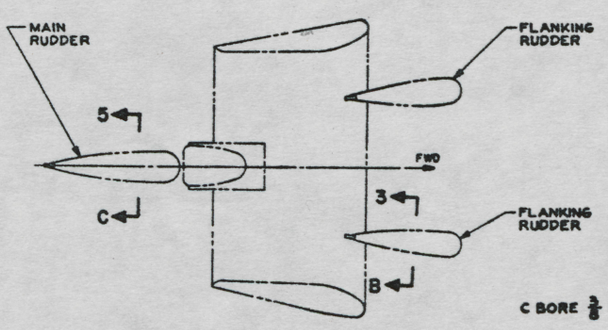

KEY PLAN 7-A
MAIN AND FLANKING RUDDERS
SCALE NONE
STBD SIDE SHOWN, PORT SIMILAR

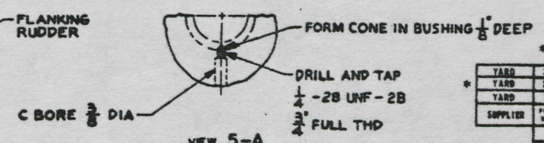

VIEW 5-A
SCALE 6"=1'-0"

*6 ONLY REQD FOR LCU 1671-1679

	YARD	3				2	F.B., 1/4" X 4" X 4" L	ASTM A36	STEEL
*	YARD	2			HS8190N-13b	18	SETSCREW, CUP PT, SLFLKG, CD PL, 1/4"-28 UNF-3A X .75" L		RL STL
	YARD	1				12	F.B., 1/4" X 1 1/4" X 2" L	ASTM A36	STEEL
	SUPPLIER	FIND NO.	FDCM	NWD SIZE	PART OR IDENTIFYING NO.	QTY REQD	NOMENCLATURE OR DESCRIPTION	SPECIFICATION	MATERIAL

PARTS LIST

UNLESS OTHERWISE SPECIFIED DIM/TOLERANCES ARE: DWG NO.
DEC PLACE 1.X ± —
FOG PLACE 1.XX ± —
FOUR PLACE 1.XXX ± —
ANGLES ± —
THIRD ANGLE PROJECTION
DO NOT SCALE THIS DRAWING
THE INTERPRETATION OF DRAWING AND ITS USE APPLIES BETWEEN GENERAL AND SPECIFIC SHOWN LINES
SHARP EDGES — .10 —
FILLET RADII — .10 —
MATERIAL

DESIGN BY HA
DATE 18 JAN 84
TRACED BY G.W. Bennett
DATE 22 June 84
CHECKED
CONTRACT NO
DRAWN BY William P. Lockhart
DATE 28 Jan 2000
APPROVED FOR PROCUREMENT Robert A. Zwitzer
DATE 31 Aug 88

U.S. ARMY MOBILITY EQUIPMENT RESEARCH AND DEVELOPMENT COMMAND
FORT BELVOIR, VIRGINIA 22060

MODIFICATION TO RUDDER PINTLE, LCU 1667-1679

SIZE	FSCM	DWG NO
A1	97403	13226E8031

SCALE 3"=1'-0" SHEET 1 OF 1